www.pintsch.net

PINTSCH
Safety for Rail

Sensor Technology and Axle Counting.

We provide more than just impulses.

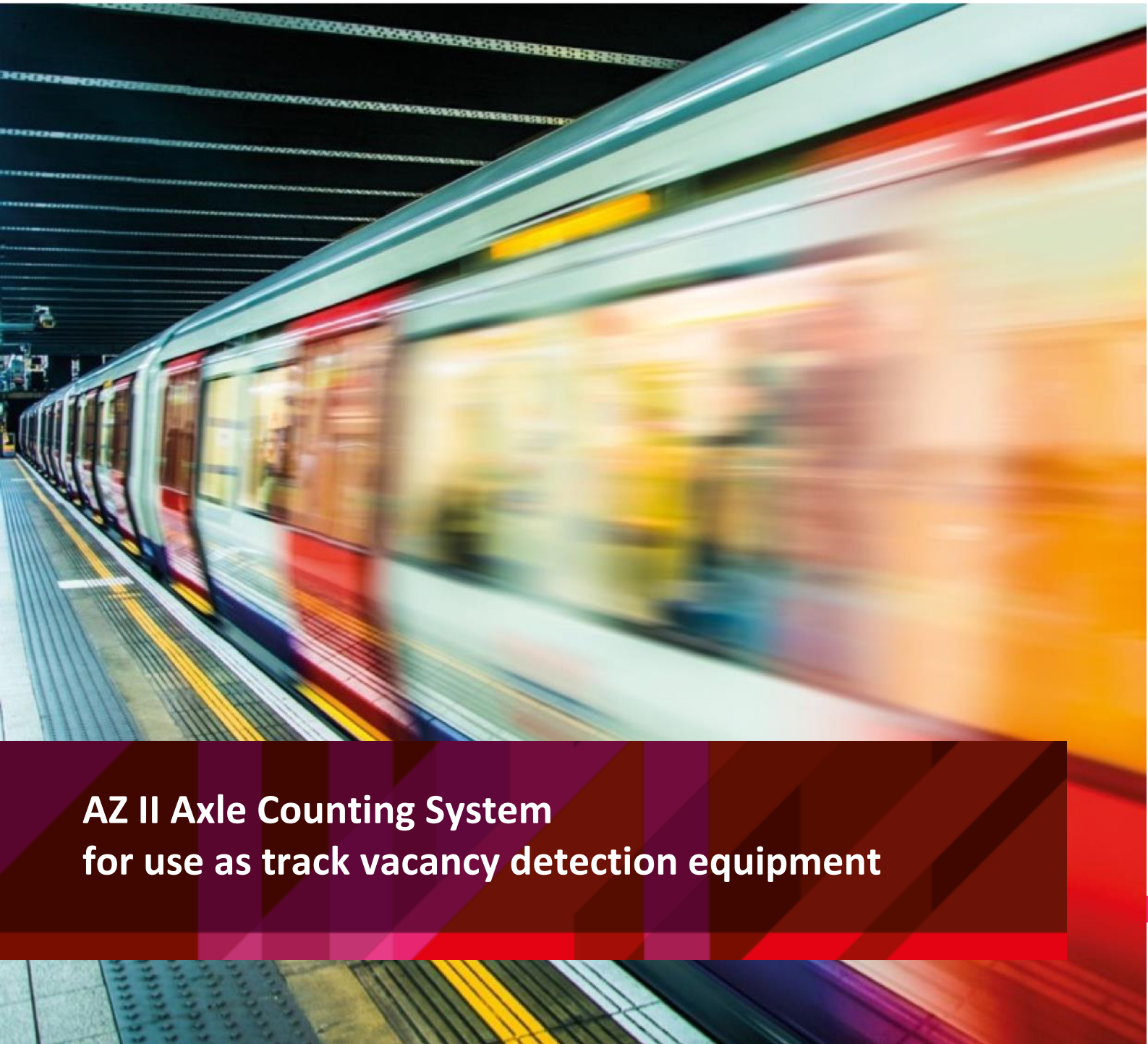

AZ II Axle Counting System
for use as track vacancy detection equipment

Table of contents

1 General requirements General requirements

1.1 Introduction

The firm of PINTSCH GmbH makes axle counting systems based on double wheel sensors (DSS) and various electronic units for processing the DSS-signals to give a track free/occupied report for tracks in railway operation. This product information describes the AZ II (" **A**chs-**Z**ählsystem Generation II") axle counting system, which comes from simplified technology for shunting areas with Local electrically Operated Point-Switches (LOPS), and in its further developed version AZ in passenger traffic is already installed in many places and has withstood its probationary test there.
The latest generation with name AZ II is an upgraded version of the AZ with new functions representing the state of the art in axle counting systems.

1.2 Field of application

The electronic axle counting system AZ II is designed for vacancy detection equipment for use with any heavy railways and light rail systems. The product was developed to meet the requirements of the following standards and specifications:

Standard/Specification	Designation	Publisher
EBO	Railway construction and operating regulations	Eisenbahn-bundesamt (EBA)
VDV 361	Railway signalling equipment Signalling principles for non-state owned railways	VDV
DIN VDE 0106	Protection against electric shock	DIN
DIN VDE 0110	Insulation co-ordinates for electrical equipment	DIN
DIN VDE 0115	Railways	DIN
DIN VDE 0831	Electric railway signalling equipment	DIN
DIN VDE 0831A1	Electric railway signalling equipment	DIN
DIN EN 50121	Railway applications: electromagnetic compatibility	CENELEC
DIN EN 50124	Railway applications: Insulation co-ordinates	CENELEC

1.3 System parameters

The AZ II axle counting system achieves the following functions:

- Registration of the occupation information and the counter impulses of connected double wheel sensors (DSS) and the processing of these impulses in an electronic axle counter.
- Management of a counting circuit to determine the track free/occupied condition for a section (counting circuit function).
- Installation in the speed range 0..250 km/h
- Counting capacity of 4096 axles for a counting circuit (ring counter)
- Two internal counting devices for simultaneous, direction dependent in and out counting over different counting spots of a counting circuit
- A voltage free secure output interface for track free and occupied reporting
- Fail-safe input interface for RESET after defects

1.4 Properties of the system

Availability

When the AZ II axle counting system is operated as specified it has an availability of a maximum of one error counting per 10^7 axles for one counting circuit or a maximum of one system failure per year.

When considering the failure behaviour in respect of the operational availability it must be considered that for each axle counting circuit there is a separate axle counting group. Theoretically possible defects consequently affect only one, or with counting spot defects of double used rail contacts, a maximum of two axle counting circuits of a complete system. With two or multitrack lines with bi-directional operation the neighbouring track can, in addition, be projected as independent segments of axle counting systems and consequently the principle of topographical redundancy is achieved.

Maintenance cost

The internal equipment is maintenance free within the maintenance period up to the necessary checking of a monitoring function ("Stö"-relay). The external equipment requires the DSS to be checked once within the maintenance period of one year to see that it is working properly and securely fixed.

The modular construction of the axle counting system should limit the repair - when necessary - to the exchange of the plug-in cards. The fault finding is reduced by the display of important system conditions by different LEDs, and is assisted by different test buttons on the front of the unit cards so that the times required for fault finding are reduced. Due to the equipment works without a micro computer, the high running times or times for the off-line tests after a repair are not required and the equipment is immediately available for service again after operation of the RESET keys.

Systems design

The counting spots (DSS) are connected to the axle counting system in a standard way, which enables the use of ready-made cables between the cable connection frame and the internal equipment. The assignment of the counting spots to the section (counting direction) is done during the systems design.

Scaleability

For each counting circuit there are two independent counters available which enable simultaneous, direction independent, in or out counting over the connected DSS A and B, as is necessary, for example with very short track vacancy detection sections (points, intermediate tracks).

If a counting circuit needs more than two DSS (e.g. with a point or a point area) these can be connected parallel to the counting units A and B. The number of counting spots which can be connected in parallel is theoretically unlimited. Parallel connected counting spots must not, however, be run over at the same time which in the normal operating cases, and with corresponding planning of the track vacancy detection section inside interlocking or block systems, does not occur.

Axle Counters Reset ACR

The conditions, under which an operation of the ACR key actually leads to the reset of the axle counter, are laid down in an internal axle counter reset logic. They are modelled on the applicable operating requirements and specifications of the individual railway companies. Independent of the data in the following overview the RESET occurs only when there are no defects in all the counting spots that belong to the section and none of these counting spots is continuously occupied.

The following variants for the RESET can be planned:

a) Absolute axle counters reset:
   After operation of the ACR key the counter of the axle counter circuit is set to zero and the track free report of the axle counting section is given

b) Conditional axle counter reset:
   After operation of the ACR key the counter of the axle counter circuit is set to zero, only when the last detected wheel has been an out counted wheel (minus).

c) Preparatory axle counters reset:
   After operation of the ACR key the counter of the axle counter circuit is set to zero. The track free report is given only when the next journey has led to the occupation, counting in at counting spot A, counting out at counting spot B (running through the complete section) and free running.

Double use of the counting spots

A segment of a buffer amplifier is assigned to each counting spot (DSS). A buffer amplifier card is thus made up of two segments, that is to say two DSSs can be connected to a buffer amplifier independent of which counting circuit the segments are used for.

The output signals of the buffer amplifiers can be connected to various counting groups, and in this way a repeated use of DSS and buffer amplifiers is achieved. The switching of the counting groups is done by optoelectronic couplers that are potentially separated and reactionless.

2 Technical structure

The axle counting system consists of the DSS, the quasi two channel buffer amplifiers, a two channel electronic axle counter, the relay track vacancy detection unit, the axle counter RESET unit and the voltage supply.

The following Figure shows the structure of the axle counter system.

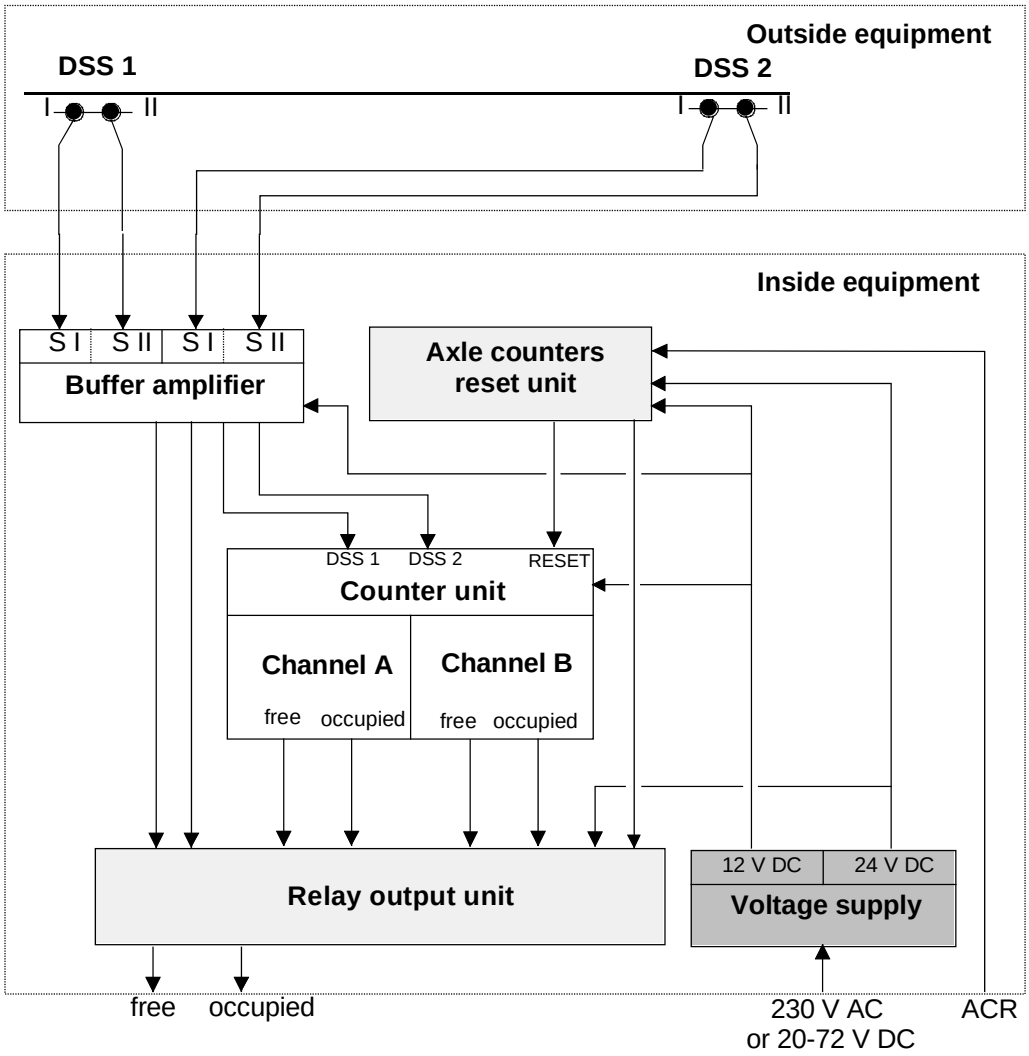

Figure 1: AZ II block circuit diagram

2.1 Applications

The likely applications are the track vacancy detection of

- track sections in stations and on the open line, as well as
- point-switches or point-switch areas

Various arrangements of the counting spots (DSS) which belong to a section result from these possible installation fields.

2.1.1 Track section

The arrangement case for a track section forms the normal arrangement for an individual axle counter circuit built with the AZ II system. The maximum achievable length of the section is limited by the required electrical parameters of the connection cable to the DSS (see Section **Fehler! Verweisquelle konnte nicht gefunden werden.**).

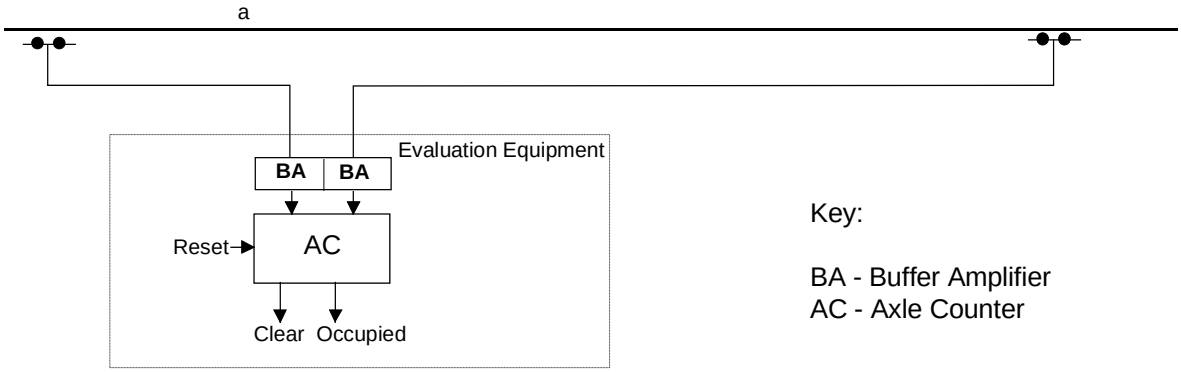

Figure 2: Normal arrangement for an individual axle counter circuit

Such an individual track section can also be used for the train operated switching-off of level crossing protection equipment (LC). The switching sensor equipment used for this must cover the whole crossing (road width), which is given by the arrangement of the DSS before and after the LC as an axle counter circuit. This arrangement can be supplemented with additional DSS for a train operated switching-on of the LC. Such additional DSSs use special directional buffer amlifiers for switching dependent on direction.

2.1.2 Several track sections

The impulses of each DSS can be used at a bordering DSS counting circuit for the track vacancy detection of several neighbouring track sections. For this the outputs of the buffer amplifiers of the repeatedly used DSS should be connected to the counting groups of the corresponding sections.

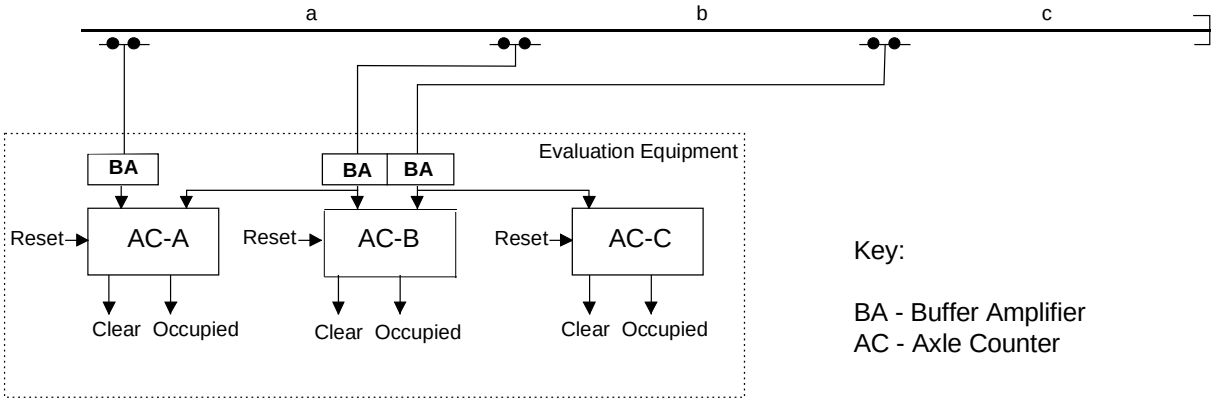

Figure 3: Track sections with double utilisation of the counting spots

2.1.3 Points sections

Both individual points and double slip points can be fitted with the AZ II system.

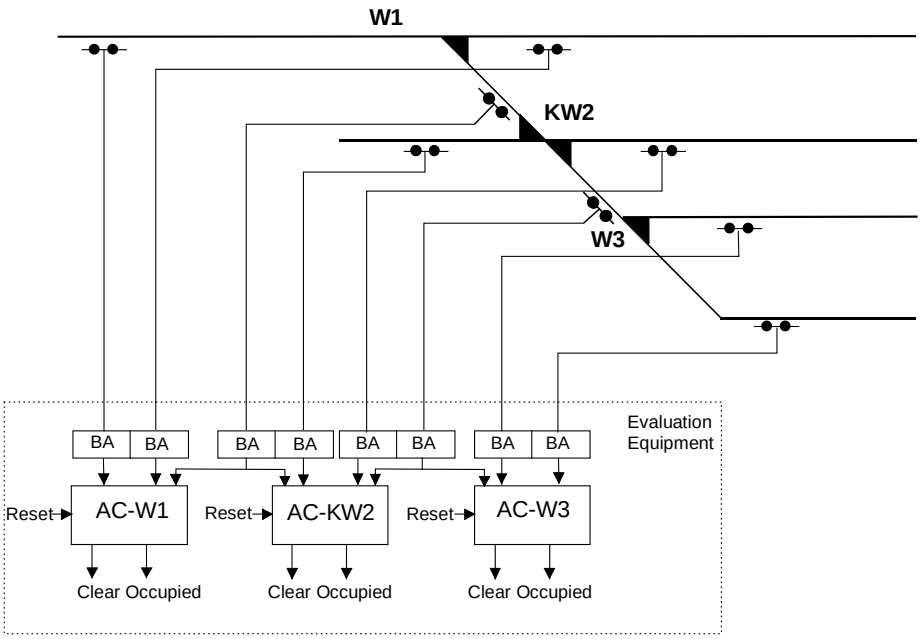

Figure 4: Track vacancy detection of points ("W") and double slip points ("KW")

2.1.4 Integrated points sections

The arrangement as shown in Figure 6 offers the possibility of a cost effective solution for track vacancy detection in integrated points sections. Up to 8 DSS can be connected to one evaluation unit to be integrated and processed simultaneously in such an arrangement.

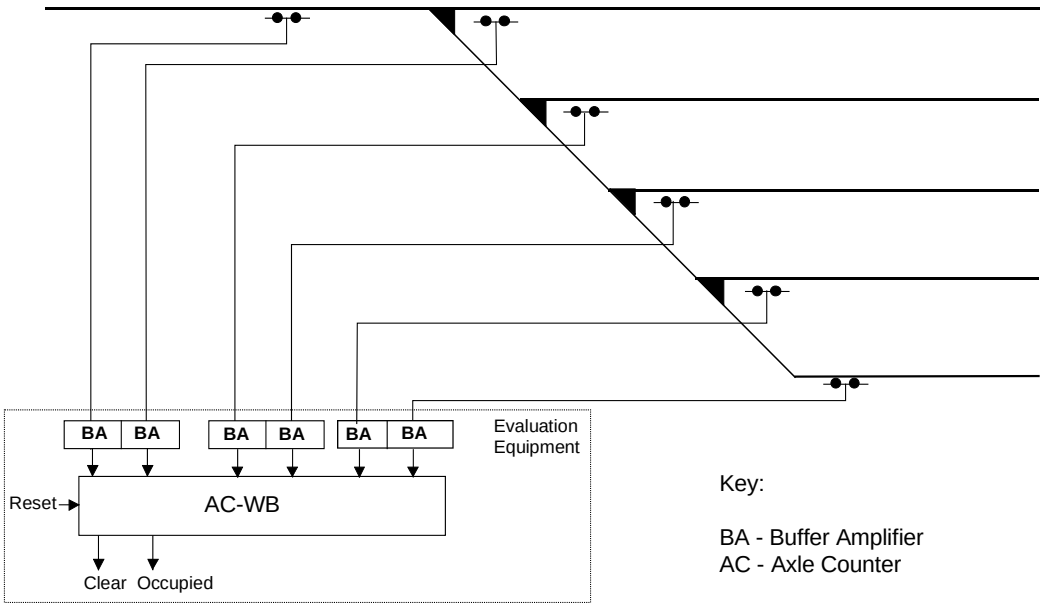

Figure 5: Integrated points section ("WB") with connected counting spots

2.2 Counting spots

2.2.1 Sensors

The Pintsch double wheel sensors (DSS) well-tried in thousands of applications (see DSS reference documents) are used in the counting spots of the AZ II axle counting system. The DSSs enable direction dependent detection of rail wheels at the given point.

The DSS is connected with its connection cables through a signal cable junction box directly with the signal cable that leads directly to the assessment device (internal equipment). Beside the DSS no additional equipment is necessary on the track which

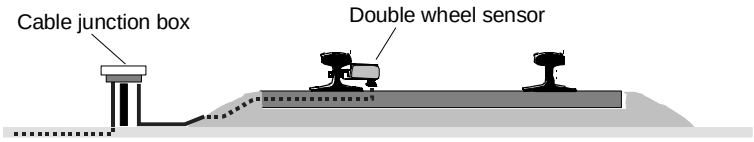

makes the system maintenance friendly.

Figure 6: DSS on the track (sketch)

The DSS consists of two galvanically separate sensor systems that are independent of one another. The independence of the individual systems is the basis for certain safety considerations and therefore must not be cancelled by all the influences that affect railway operation. One component of the DSS is a fixed connected, cast flexible connection cable 5 m long. No electronics is necessary on the rail side for signal preparation or assessment.

2.2.2 Mechanical fastening

The construction and fastening of the DSS are so designed that they can withstand the severe mechanical and environmental loading of railway operation. The equipment is assumed to have a life (excluding violent damage) of at least 10 years.
The DSS is fixed to the rail web with bolts. The hole may only be located in the neutral zone (13 mm diameter). Other assemblies, e.g. for tramways channel rails RI 60, are possible.

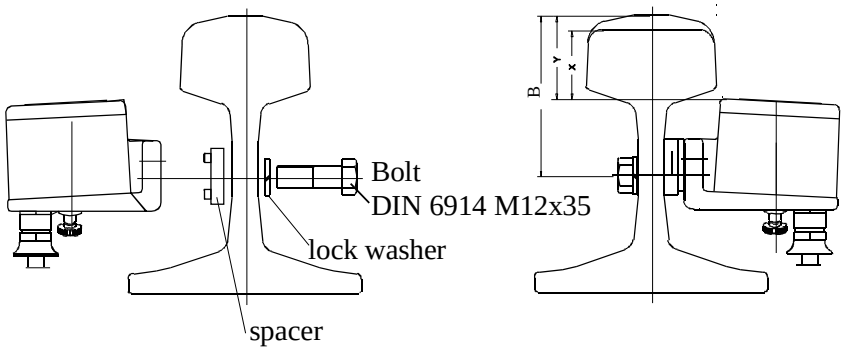

Figure 7: Fitting of the DSS to the rail

The upper edge of the installed DSS is 45 mm below the top of the rail when the rail is new and consequently outside the normal loading gauge specified by EBO. The installation dimensions of the DSS on the inner side of the rail are so compact that even wheels of modern lowfloor passenger railcars, as well as vehicles with tilting bodies, can be picked up without difficulty.
The position of the sleepers does not need to be changed for the installation of the DSS. The installation of the DSS in the tongue area of points is possible with an internal distance apart of the railheads of at least 110 mm. Ballastless track is permissible, provided the normal installation of the DSS is not affected. For tracks with noise insulation such as, for example, is used with suburban railways a corresponding cut out is provided for the assembly of the DSS.
It is possible to fasten the DSS on **all** current rail profiles. Some typical types of rail with their designation are given in the following list:

Germany	:	S 49, S 54, UIC 60, S 41
Switzerland	:	SBB I, UIC 54 (SBB III), UIC 54E (SBB IV), VST 36 (SBB V), VST C, SBB VI
Austria	:	XXIVa, Xa, S33, A, B (S 49), C (UIC 54), UIC 60, VA 71 B
Poland	:	S 49, S 42, UIC 54, UIC 60
USA	:	90 RA, 100 ASCE, 100 RE, 100 RA, 115 RE, 119 RE, 132 RE, 136 RE, 140 RE

2.2.3 Technical parameters

Every axle which passes over the sensor stands on it or remains on it, regardless of speed, is reliably picked up by the DSS provided it meets the permissible gauge and rail wear.

Smallest wheel diameter:	250 mm *)
Largest wheel diameter:	2000 mm *)
Runover speed (sensor):	≤ 350 km/h
Flange length:	25 - 36 mm
Smallest wheelbase:	700 mm
Temperature range:	-40..+85 °C
Reliability of counting:	10^{-7} errors/axle
MTBF:	420.000 h (Type 2N-59-1R-600-40) to MIL 217d at 40° C

*) Applies for rail vehicles and light regional railcars, rail buses and suburban vehicles with wheelsets specified in EBO, as well as for light rail (also low floor vehicles).

The maximum speed is only possible with wheel sets, which are allowed to run at this speed. These normally have a diameter of > 900 mm.
Stationary axles in the area covered by the DSS produce for the duration that they are there an occupied signal. An “impulse fluttering“ does not occur.

2.2.4 Distance apart

The distance apart is designated in the case of the AZ II axle counting system as the maximum cable length between the input place (DSS) and output device (internal equipment). The distance apart is limited by the ohmic resistance of the connection cable. The cable resistance of the cable may be up to 200 Ohms.
The achievable distance apart is obtained from this value and the type of star quad signal cable installed. In the following table they are given for some typical core diameters as examples. The recommended core diameter is 0.9 mm.

wire diameter d / mm	Loop resitance R / Ohms	Distance apart s / m
0,9	200	3563
1,4	200	8621

Table 1: Distance apart for typical copper cable

In special cases the achievable distance apart can be increased up to 15 km by connecting an amplifier module which is installed in a cable junction box (for core diameters of 1.4 mm). However, the amplifier module requires a local supply voltage.

2.2.5 Recognition of the devices falling off

The sensor systems of the DSS are predamped by the metal mass of the rail. If this predamping is not present the sensor system produces at its output a signal picture which corresponds to the permanent occupation of a stationary axle. If the DSS falls off or is removed from the rails or is improperly assembled on the rail this is consequently recognised by the axle counting system.
The occupation produced is only lifted for all counting circuits affected after the operating staff have repaired the defect and put the equipment into the RESET.

2.3 Evaluation equipment

2.3.1 Design

The devices of the internal equipment (axle counting units) are fitted in frames or control cabinets, which are generally fitted in the relay rooms of interlockinges or relay housings (e.g. concrete relay room).
They can also be installed in external control cabinets. Air conditioning of the external cabinets is not then necessary.
The electronic assemblies in the simple Euro plug-in format are installed in the unit carriers (19" plug-in racks). The connection of the cable to the external equipment is done by terminal strips which are arranged on the assembly plate of the frames or control cabinet.

2.3.1.1 Individual axle counting units

The connection between the assemblies is done with these variants with a tested cabling on the back of the unit carrier. In this way an extremely flexible adaptation to the local circumstances is possible.
Obsolete track vacancy detection equipment (e.g. old track circuits) can be replaced in the same frame by axle counters. With building units, which are less than 19" wide, the plug-in units can also be shortened.

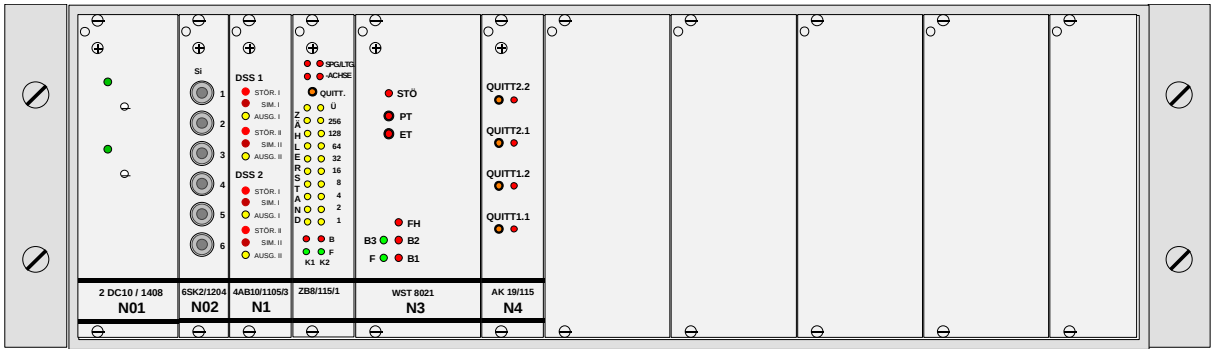

Figure 8: Front view of a 19"-plug-in unit with a single axle counting unit

2.3.1.2 Multiple axle counting units

The connections between the assemblies of the unit carrier are done by backpanes. The cabling and the test work is kept low by the use of standardised backplanes (84 TE) for each of 6 buffer amplifier cards (12 DSSs) and 4 axle counter units (assemblies for a counting circuit).

The voltage supply of the individual function groups (Figure 10, upper plug-in unit left) is done by voltage supply cards plugged in to a seperate rack and are connected to the backpanes by wireing.

Consequently the voltage supply units can be chosen to have different power levels depending on the number of axle counting systems to be supplied.

Figure 9: Design of a multiple axle counting unit

2.3.2 Buffer amplifier type: 4AB10/1105/3

The buffer amplifier units are allocated to the DSSs. A buffer amplifier unit contains two inputs for the switching of each double wheel sensor (DSS). The two sensor systems of a DSS are taken over separate signal paths so that a quasi two channel system is achieved regarding the failure revelation.

If one axle counting system receives its DSS impulses from buffer amplifiers of neighbouring DSS (multiple use), no dedicated buffer amplifier needs to be provided for this counting circuit. The buffer amplifier adapts the analogue DSS signals to the digital inputs of the counting unit and decouples the internal and external equipment. The DSS systems are fed with constant current. Depending on the damping the internal resistance of the DSS systems changes and consequently the voltage drop across the constant current source. From this voltage drop, the reports track free or occupied are produced for each part system of the DSS.

In addition a monitoring of the sensor systems of the DSS takes place on the buffer amplifier for wire breakage, wire short circuit, and depending on the corresponding DSS type, orderly fastening of the DSS to the rail.

The track occupied report of the axle counter circuit takes place by damping of one of the two sensor systems of the double wheel sensor (DSS). The buffer amplifier works directly on the relay chain of the output assembly and on the input of the counting unit through independent optocouplers.

The connection between the buffer amplifier cards and the terminal strip is usually done by ready made connection cables.

Front view	LED/key	Explanation
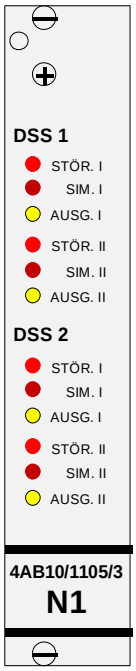	**DSS1**	
	STÖR I	Red LED lights if a cable breaks or if a wire short circuits on DSS 1 System I
	SIM I	With this key an occupation of the DSS 1 System I can be simulated.
	AUSG I	Yellow LED lights if there is a wire short circuit, wire break and with DSS 1 System I occupied.
	STÖR II	Red LED lights if a cable breaks or if a wire short circuits on DSS 1 System I
	SIM II	With this key an occupation of the DSS 1 System II can be simulated.
	AUSG II	Yellow LED lights if there is a wire short circuit, wire break and with DSS 1 System I occupied.
	DSS 2	As DSS 1 however on DSS 2

2.3.3 Counter unit type: ZB8/115/1

The fail-safe electronic counter unit is the centre piece of the axle counting system. The counting direction is derived on the counting unit from the position of the switchflanks of both DSS part systems to one another. By direction independent running over the double wheel sensors the axles of two channel electronic counters are counted in or counted out. In this way it is possible to count in or count out over two DSSs of the axle counter circuit at the same time.
A track free report is given after the same number of axles have come in and gone out by fail-safe comparison of the counter condition in both channels, when the last recognised counting process was a counting out process.

Front view	LED/key	Explanation
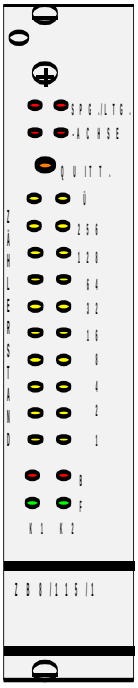	SPG.STÖ - ACHSE	Red LED lights after switching on or after a voltage failure of the supply voltage and after a minus axle.
	QUITT	A local reset signal is produced by the "Quitt" key. This resets the counter as well as the flip-flops of the voltage and DSS wire defect.
	Ü	”Überwacher” by means of “control relay” Yellow LED lights if the control relay drops down due to the flank sequence on the inputs does not occur in the correct sequence. (Touching one or both DSS systems without completely passing over. DSS systems of unequal switching distance).
	ZÄHLER-STAND	"Count"; The LED's show the stages of a 9 stage binary counter (511 axles). The counters adjacent to the LEDs indicate the significance.
	B	”Besetzt” means “Occupied”; Red LED's light if the counter position of the in and out counters is not the same or a monitoring relay is set.
	F	“Frei” means “Clear”; Green LED's light if the counter position of the in and out counters is the same and no monitor is on.
	K1, K2	”Kanal 1, Kanal 2”, Column of LEDs shown for each of the two processing chanels (2 of 2 safety related device)

2.3.4 Relay output unit type: WST 8021

The interface to the control equipment (interlocking, marshalling yard control office) is done with a relay unit. The card compares the two channels of the counting unit and makes outlets for the safety relevant data “track free” and “occupied” available.

When the axle counting system is defective the “occupied” output is also activated in each case and the “track free” output interrupted.

The second function of the unit consists of carrying out the safety shut down, which is operated by apparent failures in the axle counting system, by the counting channels or relays. It blocks the output and forces the output of the occupied condition to the equipment above it. The counting circuit achieved with the respective axle counting system goes into the “occupied” condition after operation of the circuit breaker and can be suppressed by the ACR (see procedure for the RESET in section 2.4.2).

Front view;

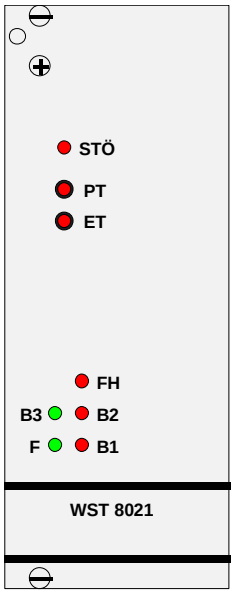

LED/ key	Explanation
STÖ	The red LED lights up if there is a difference in the two channel axle counter. Inequality of the optocoupler ZB1 and ZB2.The check key serves to check that the STÖ relays have not become defective.
PT	The PT key drops down the STÖ relay (to be tested yearly)
ET	The ET key pulls in the STÖ relay after failure or PT-test
FH	If the axle counter group is free the FH relay is defective and the LED FH is dark. The relay FH pulls in when the axle counter circuit is occupied (SI + SII of a DSS are occupied) and the red LED FH lights up.
B3	The green LED B3 of the relay B3 lights up, when the axle counter is free. The relay B3 drops out after occupation of the axle counter.
B1/B2	The red LED's light up when the optocouplers ZB1/ZB2 (see LED B1/B2 of the axle counter) of the axle counter are closed. The occupation of the axle counter occurs after a occupied, SI free, SII free).
F	The green LED lights up, when the axle counter is free (LED F1 and F2 of the axle counter light up and no DSS-system is/was occupied).The occupation of a DSS system causes the F relay to drop out and only pick up again after an occupation of the axle counter ZB9/115 and the associated track free report.

2.3.5 Axle counters reset unit type: AK 19/115

As input interface the axle counter reset unit offers a safe input for the Axle Counter Reset key (ACR). The external ACR-key or the "Quit" keys on the front face of the unit causes not only a reset of the counter but simultaneously the controlled put back of the switching and the track vacancy detection. A condition for the track vacancy detection is the correct functioning of the counters. These are checked by simulation of the counting in and counting out procedures with 2 axles by the axle counter reset unit.

The 2-axle check of the counter unit is not implemented in case of a systems design with preparing axle counters reset (see section 1.4). In this case the pressed "Quit" keys or set ACR inputs only effect a reset of the counter unit to zero. The test counting has to be done by the next train passing the whole axle counter circuit or by simulating axles with the "SIM" keys on the buffer amplifier cards.

The axle counting reset unit can achieve the above mentioned functions for up to two counting circuits which leads to better space utilisation of the units and contributes to a cost effective solution.

Front view;	LED/ key	Explanation
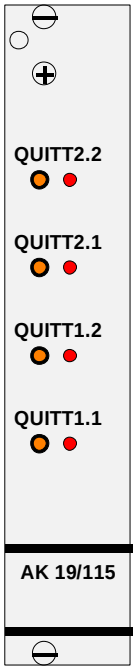	QUITT 1 QUITT 2	If the key QUITT 1 and QUITT 2 are operated the relays Q1.1 and Q1.2 pull in. Through the relay contacts the axle counter is put back, the relay card is switched to the RESET and then an in and out counting of 2 axles is simulated on the axle counter. The LED's are connected parallel to the relays Q1.1 and Q1.2.

2.3.6 Voltage monitoring unit type: AR32/1612

The relay unit AR32/1612 is set to monitor the supply voltage of the buffer amplifiers.
With double use of DSS this relay card causes a voltage switching of the axle counters concerned and consequently a track occupied report of the axle counters

- when the supply voltage of the buffer amplifier fails or
- if the buffer amplifier is missing (e.g. card taken out),

Front view;	LED/ key	Explanation
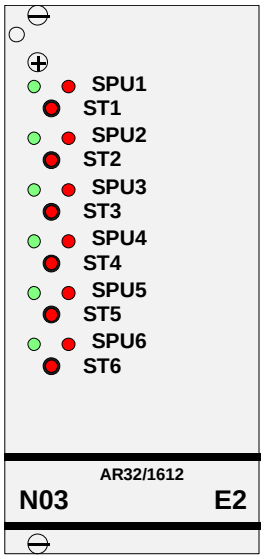	SPU 1-6	The green LED`s light up when the SPU relay is closed, thus the voltage supply is available for the buffer amplifiers.
	ST 1-6	With operation of an ST.. key a defect check of the corresponding SPU relay takes place. The defect of the SPU .. relay is indicated by a red LED SPU.. and the appropriate axle counter circuit is occupied. With the release of the SPU.. key the SPU.. relay again pulls in. After carrying out the defect check of the SPU relay the axle counter circuit must be brought into the RESET again by an AzGrT operation.

2.3.7 Voltage supply

The voltage supply provides the supply voltages for the axle counting system. It is so designed that the different international input voltages can be used. Units are designed for the following input voltages:

- 20-72 VDC (typically: 24 VDC or 60 VDC)
- 170-265 VAC (typically: 230 VAC)
- 110 VAC

In general, the input voltage should be provided uninterupted (UPS). For applications in which that is not possible, a battery buffered supply voltage can be used. The axle counting system can consequently continue to be operated when there are failures of the voltage supply for the maximum necessary time without restriction.

2.4 Interfaces

2.4.1 Track free / occupied report

The issue of the track free and occupied report to the connected signalling equipment is done through voltage free relay contacts. Safety versions of relays are used. One open contact of the output relay F and B3 is connected in a track vacancy detection chain with further relays in series and produce the output signal track free report FM. In the track free condition (FM) the relay chain is conducting. In this contact chain there are, moreover, still the contacts of the FH and of the STÖ relays, in the interplay with F and B3 which serve, among other things, to reveal failures in the relay circuit. A break in the contact chain represents the occupied condition (safe state).

The parallel connection of one closing contact of F and B3 produces the output signal $\overline{FM}$. The parallel connection must, therefore, be done externally. In the track free condition (FM) this relay chain is interrupted.

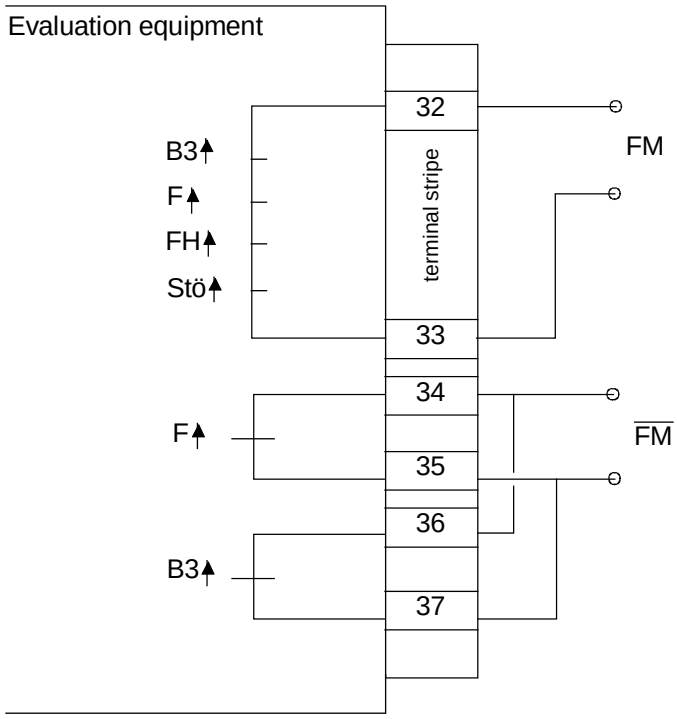

Figure 10: Outputs for track free report

The two outputs provide to a connected device (interlocking, block etc.) an exclusive output signal for the track free / occupied report, which can be used in the same way for the control of signal relays as for (exclusive) reading into fail-safe computer inputs.

2.4.2 Axle counter reset

For the connection of the axle counter reset key (ACR) for the operation by servicing staff there are two independent, galvanically separated inputs (signal relays). The inputs are always controlled exclusively. The signals must thereby be applied for at least 1 second and then change back. Only then is the axle counter reset produced.

The control from the interlocking can be done optionally by:

Variant 1

- voltage free relay contacts or key contacts T1.1 and T1.2 (switching of the inputs with the system's own supply voltages) or by

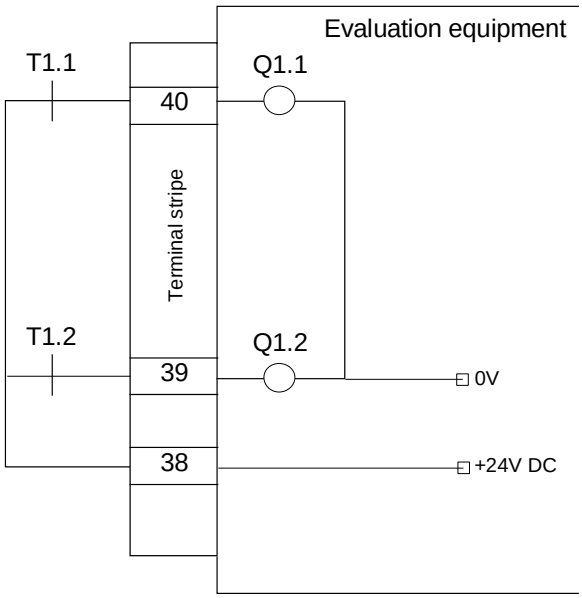

Figure 11: Input switching for ACR voltage free

Variant 2

- Connection of a 24 V DC-voltage from the interlocking to the inputs.

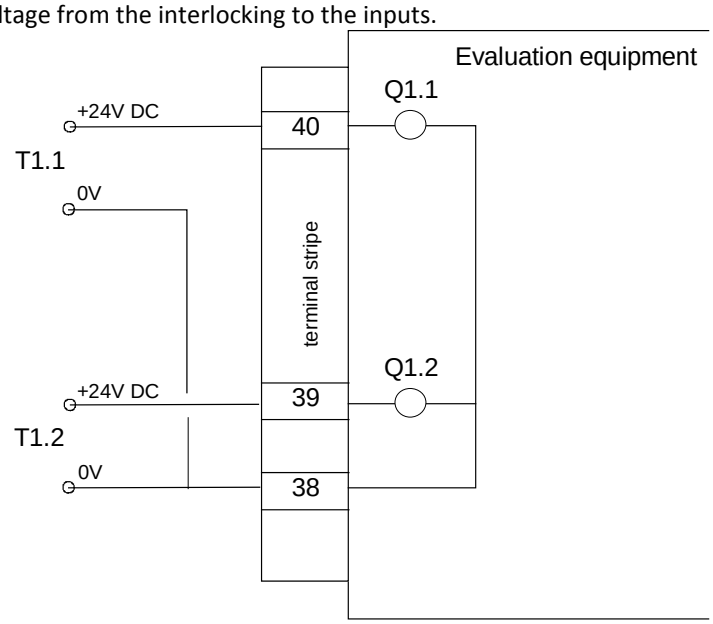

Figure 12: 24V-inputs for ACR

3 Application conditions

3.1 External equipment

3.1.1 Electrical conditions

Electrical interference	250 Veff (continuous interface)
in the external plant (DSS):	1.6 kVeff (intermittent interface)
	3,1 kV Shock

The DSS is resistant to defects caused by traction return currents, magnetic rail brakes, eddy current brakes and magnetised wheelsets. The insensitivity to lightening flashes or overhead line short circuits is given to the required extent. The DSS can withstand a test alternating voltage of 2 kV against earth or 1 kV between the systems. The DSS is watertight and dust tight (protection class IP 67). Deposits of snow, ice, oil or dirt do not affect the ability of the DSS to operate.

EMC: Designed and tested according to EN 50121-4 (CENELEC)

The test procedures to be used are the direct discharge, indirect discharge, burst, energy dense impulses and walky-talky test. For the DSS it has already been shown that it was not affected by other cables laid parallel to it (e.g. telephone cables). However, if heavy current cables of supply equipment, point motors, pump motors or similar are laid parallel over the complete length to the DSS connection cable they should be kept at least 6 cm away.

3.1.2 Climatic conditions

Ambient temperature:	+85°C to -40°C
Humidity:	Water with occasional immersion (IP 67)
Air pressure:	700 to 1320 hPa (corresponds to 0 to 2200 m above sea level)

3.1.3 Mechanical conditions

Vibrations:	60g at a frequency band of 25-30 Hz
Loading:	< 200 kg in vertical direction

3.2 Internal equipment

3.2.1 Electrical conditions

Electrical interference:	250 Veff (continuous interference)
in the internal plant (assessment):	1.6 kVeff (intermittent interference)
	2.3 kVShock (flash)

The air and creep paths in the internal equipment should be designed as specified in DIN VDE 0106 Part 101 with reinforced insulation for degree of fouling 2 (DIN VDE 0110).

EMC:	Designed and tested according to EN 50121-4

The test procedures to be used are the direct discharge, indirect discharge, burst, energy dense impulses and walky-talky-test.

Voltage supply:	Interruption of over 1 ms, 10 times
(Buffer battery or with unbuffered operation the input voltage)	at intervals of 2 s Voltage reduction -20% over 20 min

3.2.2 Climatic conditions

Ambient temperature:	+50°C to -25°C
Humidity:	10% to 100% relative humidity Annual mean 75% relative air humidity Dew formation possible
Air pressure:	700 to 1320 hPa (corresponds to 0 to 2200 m above sea level)

Mechanical conditions

Vibrations:	10 to 55 Hz, 5 g, 20 mmss
Shock:	10 g

PINTSCH GmbH
Hünxer Str. 149
46537 Dinslaken
Germany

T +49 20 64 602-0
F +49 20 64 602-266

info@pintsch.net
www.pintsch.net